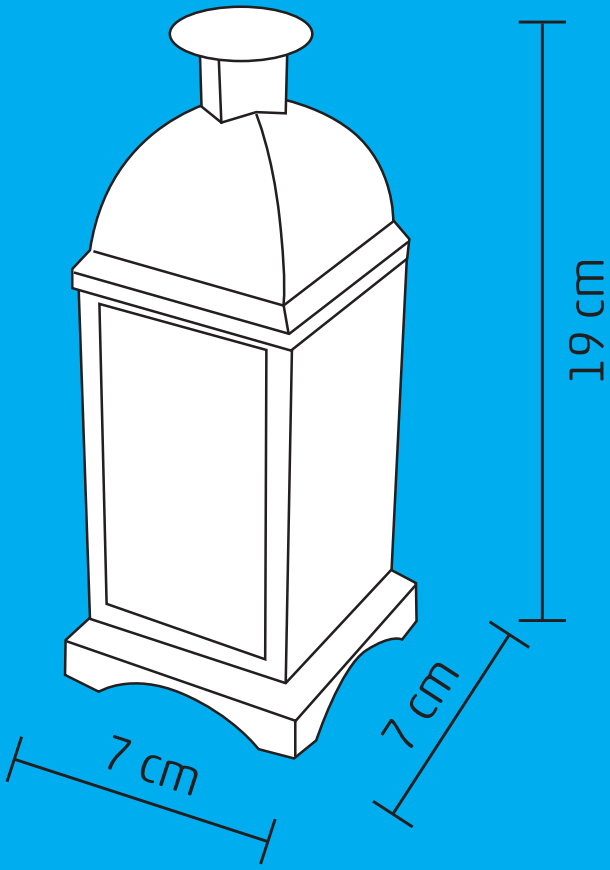
19 cm
7 cm
7 cm