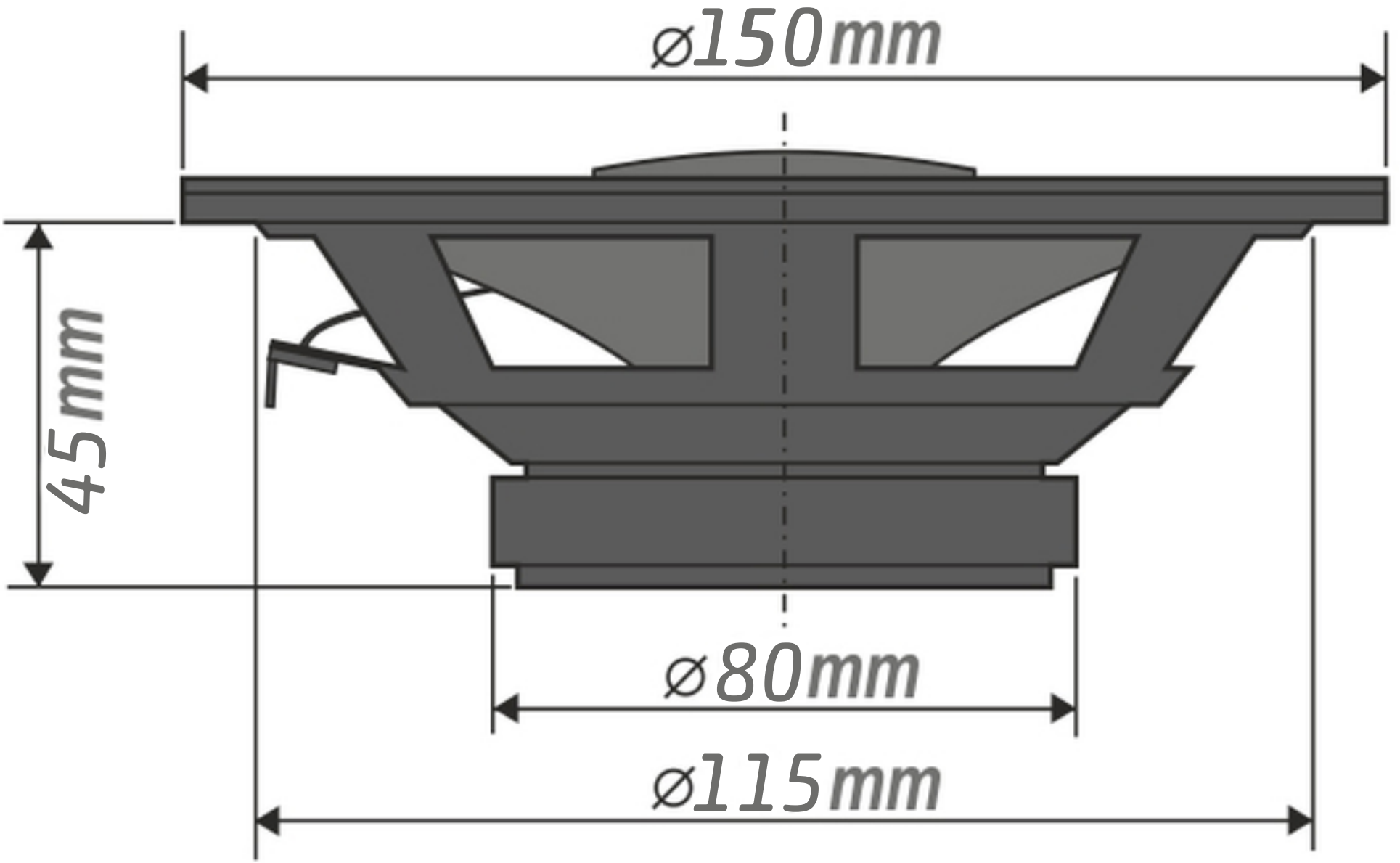
ø150mm
45mm
ø80mm
ø115mm