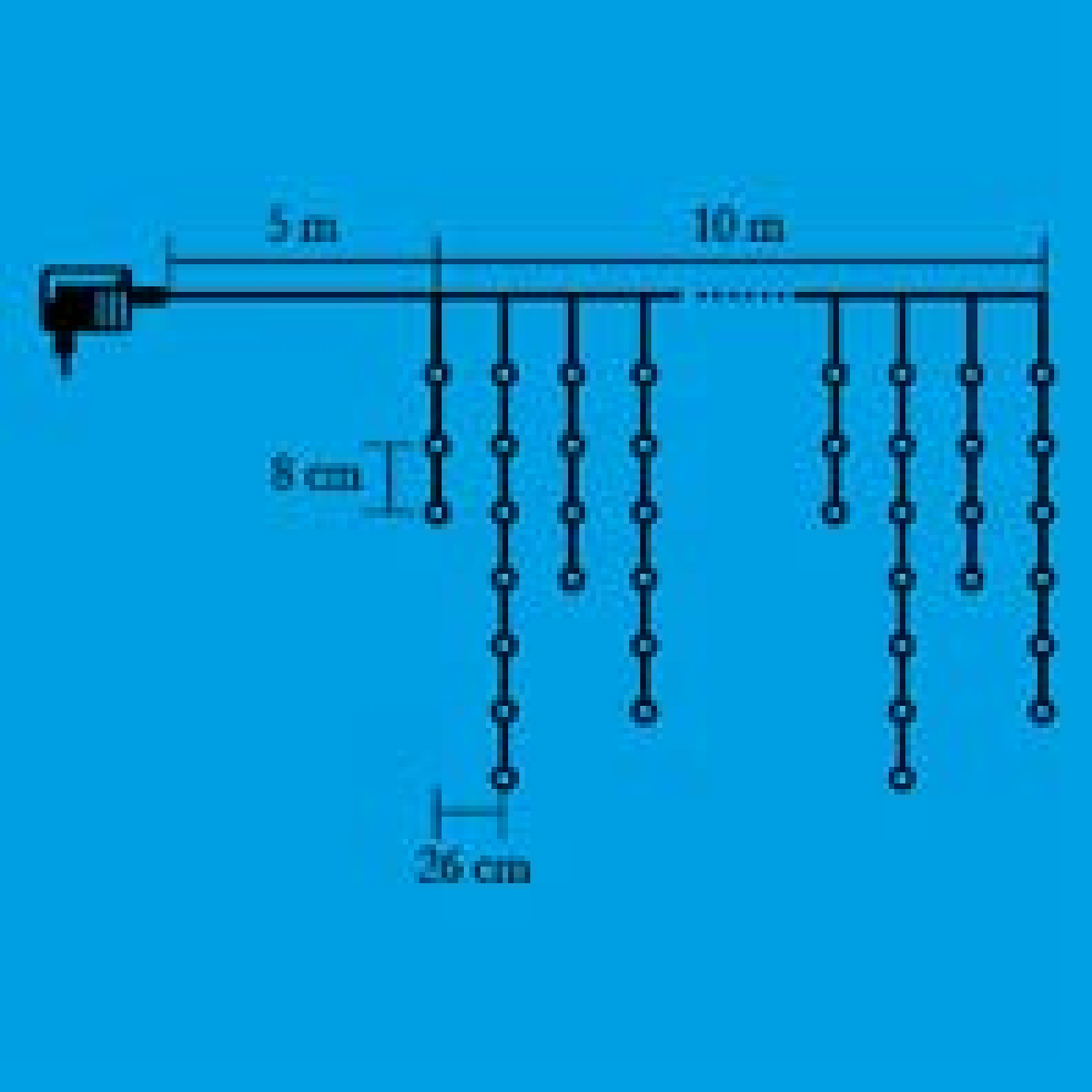
5 m
10 m
8 cm
26 cm